SPEC. No. ED-04P218
ISSUE February 2, 2005

SHARP

OPTO-ELECTRONIC DEVICES DIVISION
ELECTRONIC COMPONENTS GROUP
SHARP CORPORATION

SPECIFICATION

DEVICE SPECIFICATION FOR

PHOTOCOUPLER

MODEL No.

PC929

Business dealing name		Business dealing name	
	PC929J00000F		PC929YJ0000F

Specified for

Enclosed please find copies of the Specifications which consists of 20 pages including cover.
This specification sheets and attached sheets shall be both side copy.
After confirmation of the contents, please be sure to send back ☐ copy of the Specifications with approving signature on each.

CUSTOMER'S APPROVAL

DATE

BY

PRESENTED

DATE

BY

H. Imanaka,
Department General Manager of
Engineering Dept., II
Opto-Electronic Devices Div.
ELECOM Group
SHARP CORPORATION

REFERENCE
PC929J00000F

Product name : PHOTOCOUPLER

Model No. : PC929

Business dealing name	Business dealing name
PC929J00000F	PC929YJ0000F

1. These specification sheets include materials protected under copyright of Sharp Corporation ("Sharp"). Please do not reproduce or cause anyone to reproduce them without Sharp's consent.

2. When using this product, please observe the absolute maximum ratings and the instructions for use outlined in these specification sheets, as well as the precautions mentioned below. Sharp assumes no responsibility for any damage resulting from use of the product which does not comply with the absolute maximum ratings and the instructions included in these specification sheets, and the precautions mentioned below.

   (Precautions)

   (1) This product is designed for use in the following application areas ;
   - · OA equipment · Audio visual equipment · Home appliances
   - · Telecommunication equipment (Terminal) · Measuring equipment
   - · Tooling machines · Computers

   If the use of the product in the above application areas is for equipment listed in paragraphs (2) or (3), please be sure to observe the precautions given in those respective paragraphs.

   (2) Appropriate measures, such as fail-safe design and redundant design considering the safety design of the overall system and equipment, should be taken to ensure reliability and safety when this product is used for equipment which demands high reliability and safety in function and precision, such as ;
   - · Transportation control and safety equipment (aircraft, train, automobile etc.)
   - · Traffic signals · Gas leakage sensor breakers · Rescue and security equipment
   - · Other safety equipment

   (3) Please do not use this product for equipment which require extremely high reliability and safety in function and precision, such as ;
   - · Space equipment · Telecommunication equipment (for trunk lines)
   - · Nuclear power control equipment · Medical equipment

   (4) Please contact and consult with a Sharp sales representative if there are any questions regarding interpretation of the above three paragraphs.

3. Please contact and consult with a Sharp sales representative for any questions about this product.

1. Application

This specification applies to the outline and characteristics of OPIC photocoupler Model No. PC929 (Lead-Free Type).

2. Outline — Refer to the attached sheet, page 4.

3. Ratings and characteristics — Refer to the attached sheet, page 5 to 10.

4. Reliability — Refer to the attached sheet, page 11.

5. Outgoing inspection — Refer to the attached sheet, page 12.

6. Supplement

6.1 Isolation voltage shall be measured in the following method.

(1) Short between pins 1 and 7 on the primary side and between pins 8 and 14 on the secondary side.

(2) The dielectric withstanding tester with zero-cross circuit shall be used.

(3) The wave form of applied voltage shall be a sine wave.

(It is recommended that the isolation voltage be measured in insulation oil.)

6.2 Business dealing name

("○" mark indicates business dealing name of ordered product)

Product	Business dealing name	Remark
	PC929J00000F	
	PC929YJ0000F	Applied to product as a option (Attachment-2-1 to 2-3.)

High temperature test are carried out at production process

6.3 The block diagram, Truth table

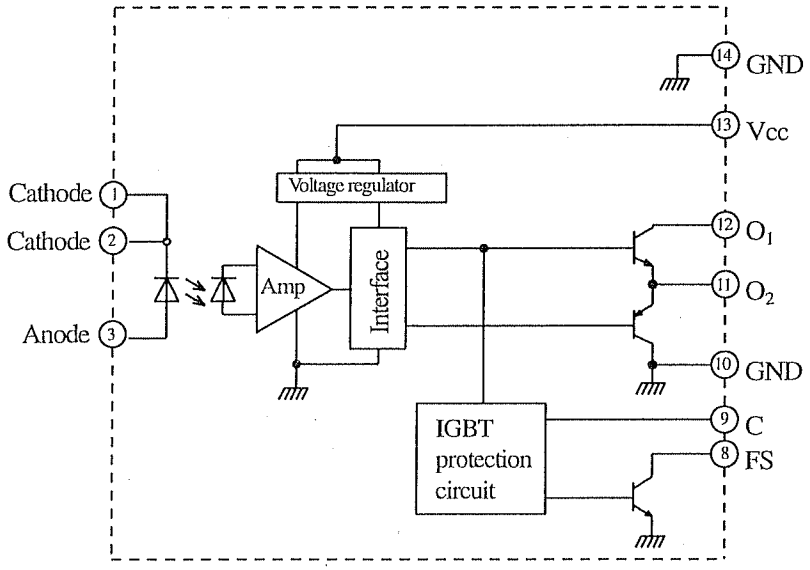

Truth table

Input	C input-output	O_2 Output	FS output	
ON	Low level	High level	High level	
	High level	Low level	Low level	At operating protection function
OFF	Low level	Low level	High level	
	High level	Low level	High level	

6.4 Package specification Refer to the attached sheet, page 13, 14.

6.5 This Model is approved by UL.
Approved Model No. : PC929
UL file No. : E64380.

6.6 This product is not designed against irradiation.
This product is assembled with electrical input and output.
This product incorporates non-coherent light emitting diode.

6.7 ODS materials
This product shall not contain the following materials. Also, the following materials shall not be used in the production process for this product. Materials for ODS : CFC_S, Halon, Carbon tetrachloride,1.1.1-Trichloroethane (Methyl chloroform)

6.8 Brominated flame retardants
Specific brominated flame retardants such as the $PBBO_S$ and PBB_S are not used in this device at all.

7. Notes
Precautions for photocouplers : Attachment-1

REFERENCE

2. Outline

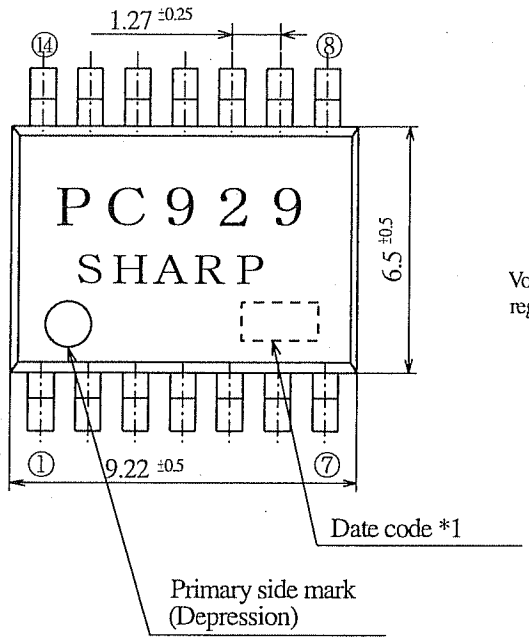

Pin-Number and internal connection diagram

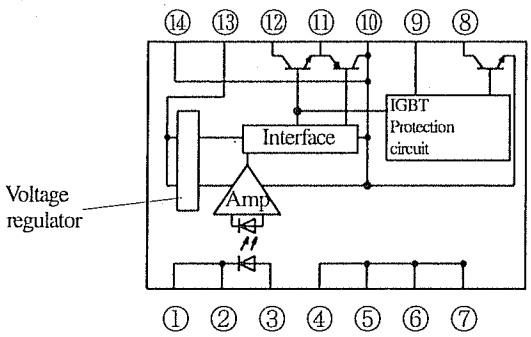

① Cathode	⑧ FS
② Cathode	⑨ C
③ Anode	⑩ GND
④ N.C.	⑪ O_2
⑤ N.C. *2	⑫ O_1
⑥ N.C.	⑬ V_{CC}
⑦ N.C.	⑭ GND

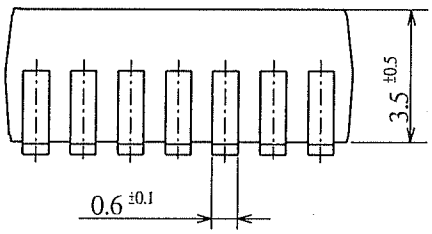

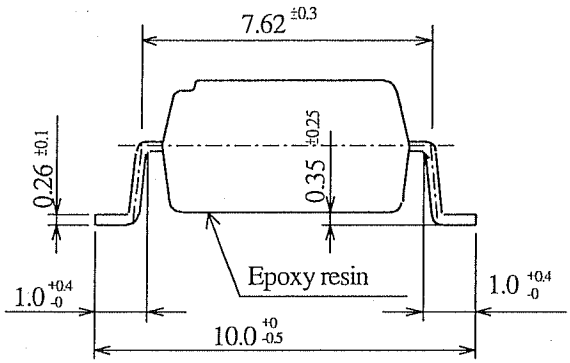

*1) 2-digit number marked according to OLD DIN standard.

*2) No.④~⑦ pins shall be shorted in the device.

Pin material : Copper Alloy
Pin finish : SnCu plating (Cu : TYP. 2%)

Product mass : Approx. 0.47g

UNIT : 1/1 mm	
Name	PC929 Outline Dimensions (Business dealing name : PC929J00000F)

REFERENCE

3. Ratings and characteristics

3.1 Absolute maximum ratings

(Unspecified : Ta=Topr)

Parameter		Symbol	Rating	Unit
Input	*1 Forward current	I_F	20	mA
	Reverse voltage	V_R	6 (Ta=25℃)	V
Output	Supply voltage	V_{CC}	35	V
	O_1 Output current	I_{O1}	0.1	A
	*4 O_1 Peak output current	I_{O1P}	0.4	A
	O_2 Output current	I_{O2}	0.1	A
	*4 O_2 Peak output current	I_{O2P}	0.4	A
	O_1 Output voltage	V_{O1}	35	V
	*2 Power dissipation	P_O	500	mW
	Over current detection voltage	V_C	V_{CC}	V
	Over current detection current	I_C	30	mA
	Error signal output voltage	V_{FS}	V_{CC}	V
	Error signal output current	I_{FS}	20	mA
*3 Total power dissipation		P_{tot}	550	mW
*5 Isolation voltage		$V_{iso(rms)}$	4.0	kV
Operating temperature		T_{opr}	-25 to +80	℃
Storage temperature		T_{stg}	-55 to +125	℃
Soldering temperature		T_{sol}	270 (for 10s)	℃

*1, 2, 3 The derating factors of absolute maximum ratings due to ambient temperature are shown in Fig. 1, 2, 3.

*4 Pulse width≦0.15 μs, Duty ratio : 0.01

*5 AC for 1 min, 40 to 60%RH, Ta=25℃

3.2 Electro-optical characteristics (Unspecified : Ta=Topr)

	Parameter	Symbol	Conditions *1	MIN.	TYP.	MAX.	Unit	Test circuit
Input	Forward voltage	V_{F1}	Ta=25℃,I_F=10mA	-	1.6	1.75	V	-
		V_{F2}	Ta=25℃,I_F=0.2mA	1.2	1.5	-	V	-
	Reverse current	I_R	Ta=25℃,V_R=5V	-	-	10	μA	-
	Terminal capacitance	C_t	Ta=25℃,V=0,f=1kHz	-	30	250	pF	-
Output	Operating supply Voltage range	V_{CC}	Ta=−10 to 60℃	15	-	30	V	–
				15	-	24	V	
	O_1 Low level output voltage	V_{O1L}	V_{CC1}=12V,V_{CC2}=-12V,FS=OPEN I_{O1}=0.1A,I_F=5mA,V_C=0	-	0.2	0.4	V	(1)
	O_2 High level output voltage	V_{O2H}	V_{CC}=V_{O1}=24V,I_{O2}=-0.1A I_F=5mA,FS=OPEN,V_C=0	20	22	-	V	(2)
	O_2 Low level output voltage	V_{O2L}	V_{CC}=V_{O1}=24V,I_{O2}=0.1A I_F=0,FS=OPEN,V_C=0	-	1.2	2.0	V	(3)
	O_1 Leak current	I_{O1L}	Ta=25℃,V_{CC}=V_{O1}=35V,I_F=0 FS=OPEN,V_C=0	-	-	500	μA	(4)
	High level supply current	I_{CCH}	Ta=25℃,V_{CC}=V_{O1}=24V I_F=5mA,FS=OPEN,V_C=0	-	10	17	mA	(6)
			V_{CC}=V_{O1}=24V,I_F=5mA FS=OPEN,V_C=0	-	-	19	mA	
	Low level supply current	I_{CCL}	Ta=25℃,V_{CC}=V_{O1}=24V I_F=0,FS=OPEN,V_C=0	-	11	18	mA	
			V_{CC}=V_{O1}=24V,I_F=0 FS=OPEN,V_C=0	-	-	20	mA	
Transfer characteristics	*2 "L→H" threshold input current	I_{FLH}	Ta=25℃,V_{CC}=V_{O1}=24V FS=OPEN,V_C=0	0.3	1.5	3.0	mA	(5)
			V_{CC}=V_{O1}=24V,FS=OPEN,V_C=0	0.2	-	5.0	mA	
	Isolation resistance	R_{iso}	Ta=25℃,DC=500V RH=40～60%	5×10^{10}	10^{11}	-	Ω	–
	Response time: "L→H" propagation delay time	t_{PLH}	Ta=25℃ V_{CC}=V_{O1}=24V,I_F=5mA R_G=47Ω,C_G=3000pF FS=OPEN,V_C=0	-	0.3	0.5	μs	(8)
	Response time: "H→L" propagation delay time	t_{PHL}		-	0.3	0.5	μs	
	Response time: Rise time	t_r		-	0.2	0.5	μs	
	Response time: Fall time	t_f		-	0.2	0.5	μs	
	Instantaneous common mode rejection voltage (High level output)	CM_H	Ta=25℃,V_{CM}=600V(peak) I_F=5mA,V_{CC}=V_{O1}=24V ΔV_{O2H}=2.0V,FS=OPEN,V_C=0	-1500	-	-	V/μs	(7)
	Instantaneous common mode rejection voltage (Low level output)	CM_L	Ta=25℃,V_{CM}=600V(peak) I_F=0,V_{CC}=V_{O1}=24V ΔV_{O2L}=2.0V,FS=OPEN,V_C=0	1500	-	-	V/μs	

*1 It shall connect a by-pass capacitor of 0.01 μF or more between Vcc (Pin No. 13) and GND (Pin No. 10,14) near the device, when it measures the transfer characteristics and the output side characteristics.

*2 I_{FLH} is the value of forward current when O_2 output changes from "L" to "H".

3.2 Electro-optical characteristics (Unspecified : Ta=Topr)

	Parameter	Symbol	Conditions *3	MIN.	TYP.	MAX.	Unit	Test circuit
Over current detection	*4 Over current detection voltage	V_{CTH}	Ta=25℃ $V_{CC}=V_{O1}=24V$ $I_F=5mA$ $R_G=47\Omega, C_G=3000pF$ FS=OPEN	V_{CC} -6.5	V_{CC} -6	V_{CC} -5.5	V	(9)
	Over current detection Voltage hysteresis width	V_{CHIS}		1	2	3	V	
Protection output	O_2 "H-L" propagation time at over current protection	t_{PCOHL}	Ta=25℃ $V_{CC}=V_{O1}=24V$ $I_F=5mA$ $R_G=47\Omega, C_G=3000pF$ $R_C=1k\Omega, C_P=1000pF$ FS=OPEN	-	4	10	μs	(13)
	O_2 Fall time at Over current protection	t_{PCOtf}		2	5	-	μs	
	O_2 output voltage at Over current protection	V_{OE}		-	-	2	V	(10)
Error signal output	Low level error signal voltage	V_{FSL}	Ta=25℃ $V_{CC}=V_{O1}=24V, I_F=5mA$ $I_{FS}=10mA, R_G=47\Omega$ $C_G=3000pF$, C=OPEN	-	0.2	0.4	V	(11)
	High level error signal voltage	I_{FSH}	Ta=25℃ $V_{CC}=V_{O1}=24V, I_F=5mA$ $V_{FS}=24V, R_G=47\Omega$ $C_G=3000pF, V_C=0$	-	-	100	μA	(12)
	Error signal "H-L" Propagation time	t_{PCFHL}	Ta=25℃, $V_{CC}=V_{O1}=24V$ $I_F=5mA, R_{FS}=1.8k\Omega$ $R_G=47\Omega, R_C=1k\Omega$ $C_G=3000pF, C_P=1000pF$	-	1	5	μs	(14)
	Error signal output Pulse width	Δt_{FS}		20	35	-	μs	

*3 It shall connect a by-pass capacitor of 0.01 μF or more between V_{CC} (Pin No.13) and GND (Pin No.10,14) near the device, when it measures the device, when it measures the over current characteristics, Protection output characteristics, and error signal output characteristics.

*4 V_{CTH} is the value of C (Pin No.9) voltage when O_2 output changes from "H" to" L".

REFERENCE

(Fig.1)

Forward current vs. ambient temperature

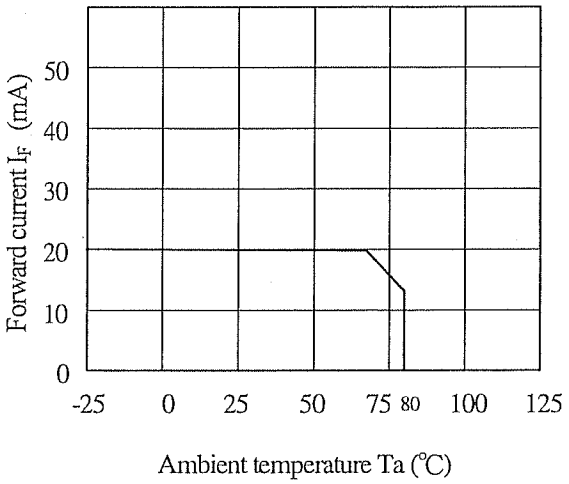

(Fig.2)

Output power dissipation vs. ambient temperature

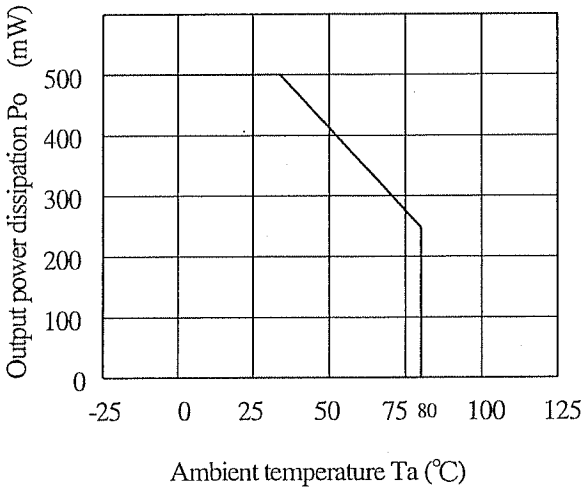

(Fig.3)

Total power dissipation vs. ambient temperature

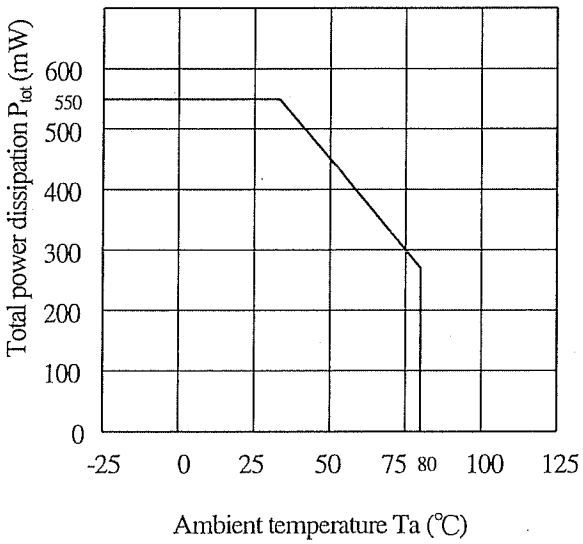

REFERENCE

Test circuit

(Fig.1)

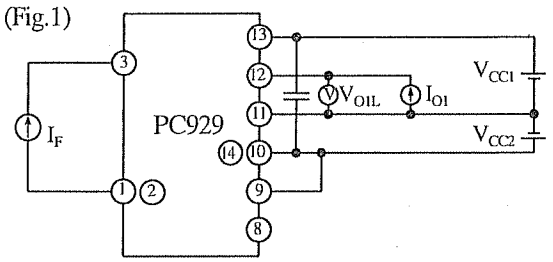

(Fig.2)

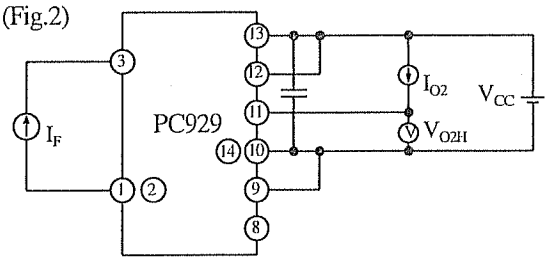

(Fig.3)

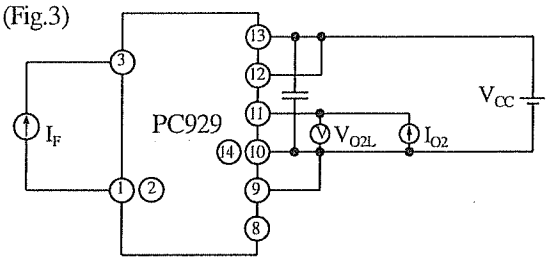

(Fig.4)

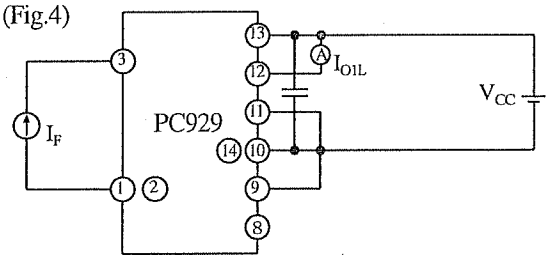

(Fig.5)

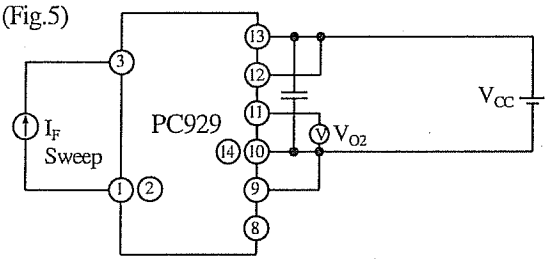

(Fig.6)

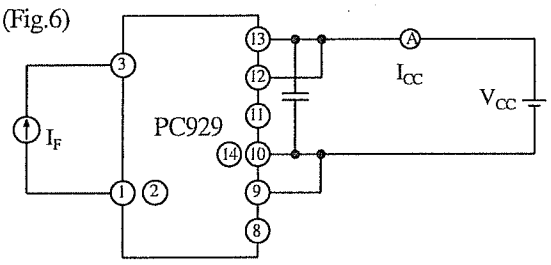

(Fig.7)

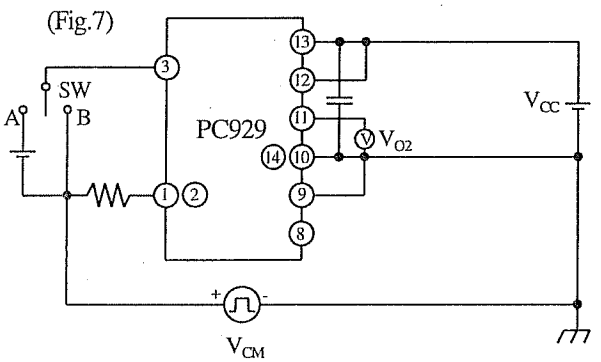

(Fig.8)

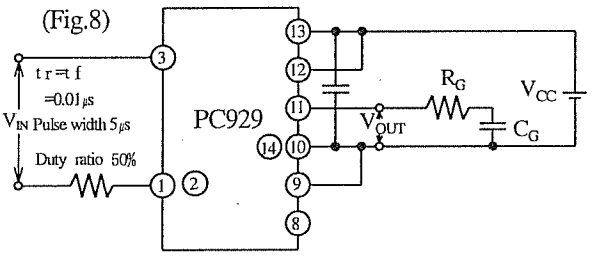

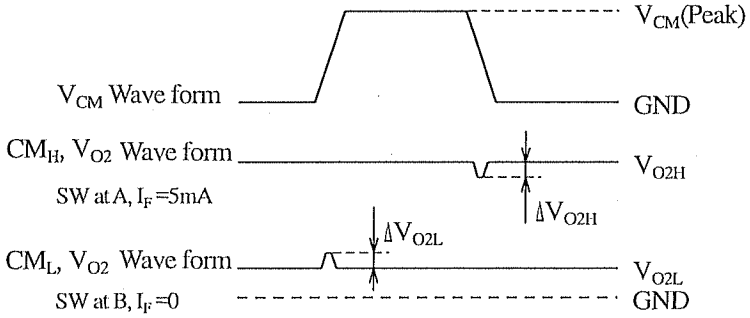

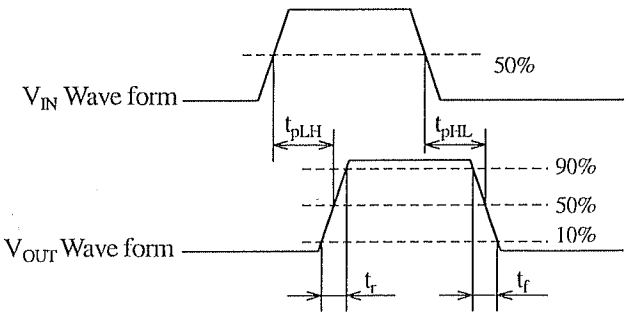

REFERENCE

Test circuit

(Fig.9)

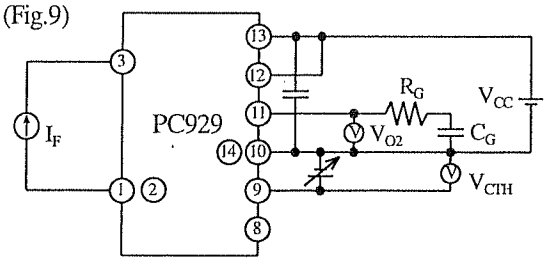

(Fig.10)

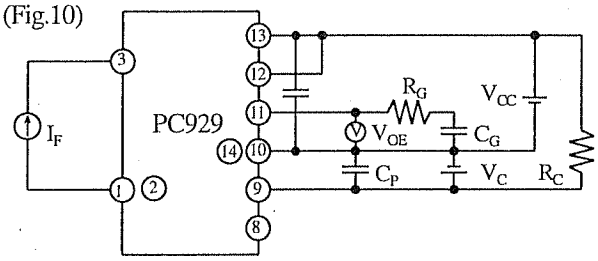

(Fig.11)

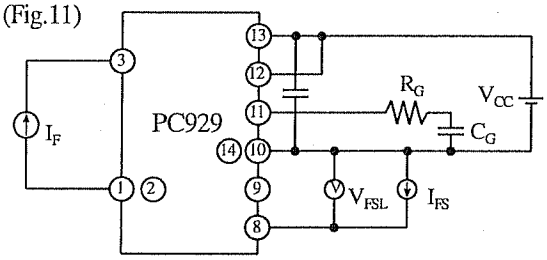

(Fig.12)

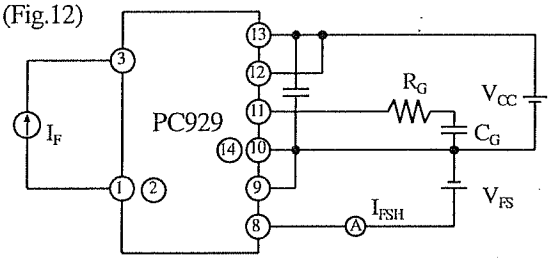

(Fig.13)

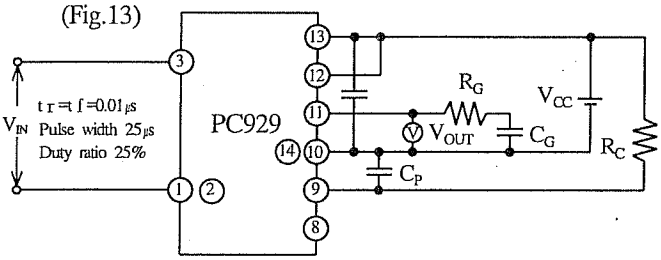

(Fig.14)

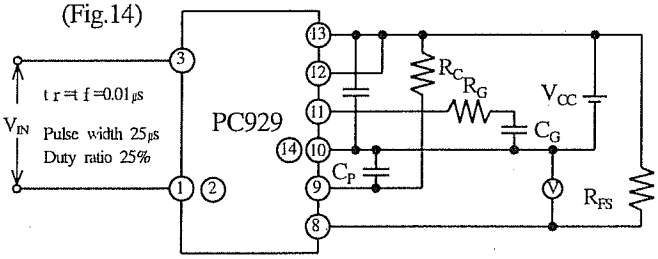

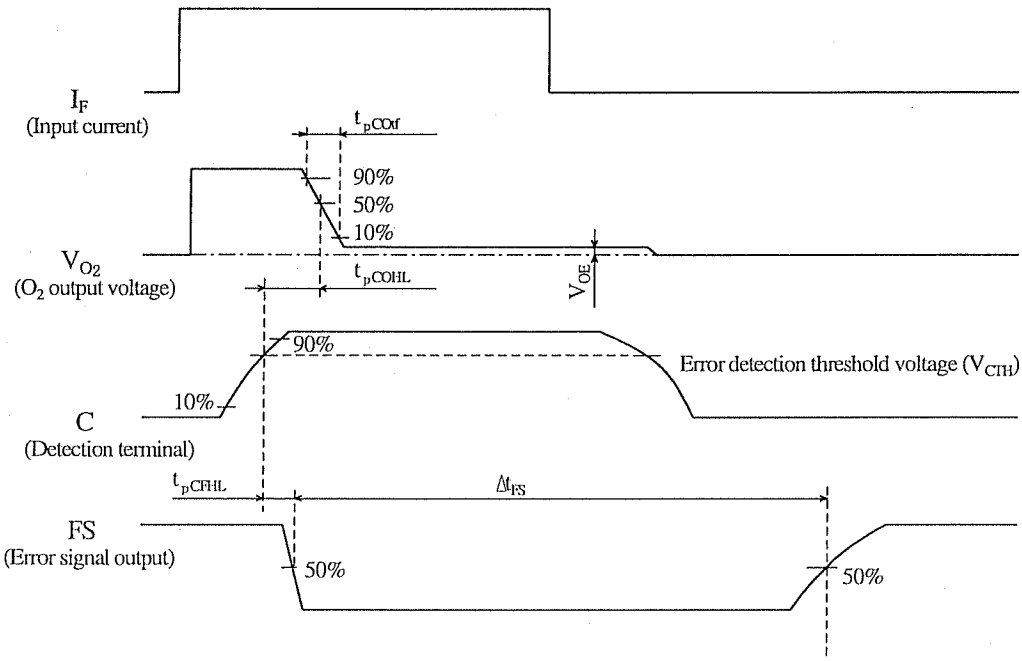

4. Reliability

The reliability of products shall satisfy items listed below.

Confidence level : 90%

LTPD : 10 or 20

Test Items	Test Conditions *1	Failure Judgment Criteria	Samples (n) / Defective (C)
Solderability *2	245±3°C, 5s	————	n=11, C=0
Soldering heat	(Flow soldering) 270°C, 10 s	V_F >U×1.2 I_R >U×2 V_{O1L} >U×1.2 V_{O2H} < L×0.8 V_{O2L} >U×1.2 I_{O1L} >U×1.2 I_{CCL} >U×1.2 I_{CCH} >U×1.2 I_{FHL} >U×1.3 t_{pcoHL} >U×1.2 V_{CTH}≠L×0.8 ~U×1.2 U: Upper specification limit L: Lower specification limit	n=11, C=0
	(Soldering by hand) 400°C, 3 s		n=11, C=0
Terminal strength *3	Weight: 1N 1 s/each terminal		n=11, C=0
Mechanical shock	15km/s^2, 0.5ms 3 times/±X, ±Y, ±Z direction		n=11, C=0
Variable frequency Vibration	200m/s^2, 100 to 2000 to 100Hz/4 min 4 times/X, Y, Z direction		n=11, C=0
Temperature cycling	1 cycle –55 °C to +125 °C (30 min) (30 min) 20 cycles test		n=22, C=0
High temp. and high Humidity storage *4	+85 °C, 85%RH, 1000h		n=22, C=0
High temp. storage	+125 °C, 1000h		n=22, C=0
Low temp. storage	-55 °C, 1000h		n=22, C=0
Operation life	I_F=20mA, Vcc=24V Ta=25 °C, 1000h		n=22, C=0

*1 Test method, conforms to EIAJ ED 4701.

*2 Solder shall adhere at the area of 95% or more of immersed portion of lead, and pin hole or other holes shall not be concentrated on one portion.

*3 Terminal bending direction is shown below.

*4 It is evaluated after washing by specified solvent in attachment-1.

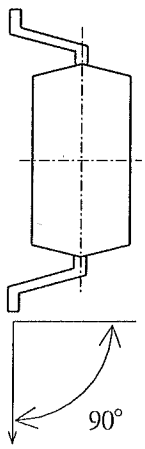

Weight : 1N

5. Outgoing inspection

5.1 Inspection items

(1) Electrical characteristics

V_F, I_R, V_{O1L}, V_{O2H}, V_{O2L}, I_{O1L}, I_{O2L}, I_{CCH}, I_{CCL}, I_{FLH}, V_{CTH}, R_{ISO}, V_{iso}

(2) Appearance

5.2 Sampling method and Inspection level

A single sampling plan, normal inspection level II based on ISO 2859 is applied.
The AQL according to the inspection items are shown below.

Defect	Inspection item	AQL (%)
Major defect	Electrical characteristics Unreadable marking	0.065
Minor defect	Appearance defect except the above mentioned.	0.25

REFERENCE

6.2 Package specification

6.2.1 Package materials

No.	Name	Materials	Purposes
①	Sleeve	HIPS with preventing static electricity	Products packaged
②	Stopper	Styrene-Elastomer	Products fixed
③	Outer case	Corrugated cardboard	Sleeve packaged
④	Craft tape	Paper	Lid of packaged case fixed
⑤	Label	Paper	Model No.,(Business dealing name),Lot No., Quantity, country of origin , Company name and inspection date specified

6.2.2 Package method

(1) MAX. 50 pcs. Of products shall be packaged in a sleeve and both of sleeve ① edges shall be fixed by stoppers ②.
(2) MAX. 20 sleeves (product ; 1000pcs.) above shall be packaged in a packing case ③.
(3) The label ⑤ shall be put on the side of the packing case.
(4) Outer case shall be closed with the lid and enclosed with craft tape ④.

6.2.3 Sleeve package outline dimensions

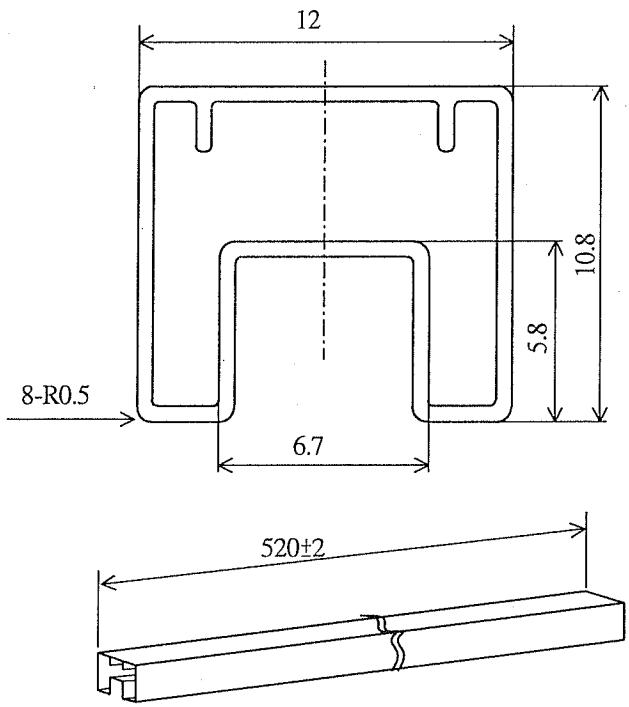

(Unit :mm)

Note 1) Thickness : 0.5±0.2mm
2) Process with applying antistatic treatment.
3) Unless otherwise specified tolerances shall be ±0.5mm.
(However except for deformation due to the rubber stopper in sleeve.)

6.2.4 Packaging outer case outline dimensions

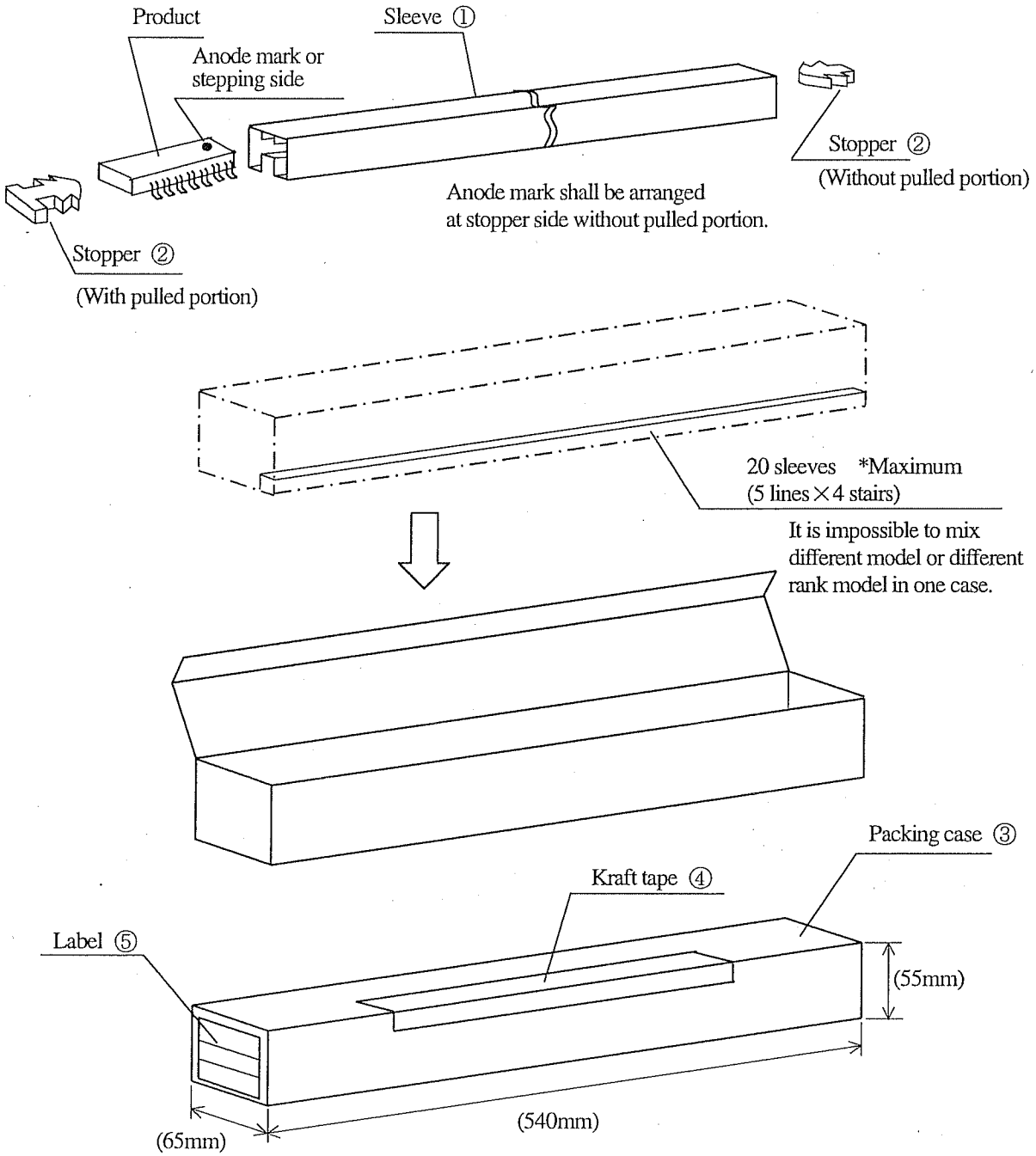

Regular packing mass : Approx. 870g

( ) : Reference dimensions

PC929J00000F
REFERENCE

Precautions for Photocouplers

1. Cleaning

(1) Solvent cleaning : Solvent temperature 45℃ or less, Immersion for 3 min or less

(2) Ultrasonic cleaning : The effect to device by ultrasonic cleaning differs by cleaning bath size, ultrasonic power output, cleaning time, PCB size or device mounting condition etc.
Please test it in actual using condition and confirm that doesn't occur any defect before starting the ultrasonic cleaning.

(3) Applicable solvent : Ethyl alcohol, Methyl alcohol, Isopropyl alcohol
When the other solvent is used, there are cases that the packaging resin is eroded.
Please use the other solvent after thorough confirmation is performed in actual using condition.

2. Precaution for use

Transistor of detector side in bipolar configuration is apt to be affected by static electricity for its minute design.
When handling them, general counterpane against static electricity should be taken to avoid breakdown of devices or degradation of characteristics.

3. Caution the circuit design

3.1 In order to stabilize power supply line, we should certainly recommend to connect a by-pass capacitor of 0.01 μF or more between Vcc and GND near the device.

3.2 We recommend to use approximately 1000pF of capacitor between C-pin and GND in order to prevent miss operation by noise. And in case that capacitor is used, approximately 1k Ω of resistance shall be recommended to use between Vcc and C-pin However, the rise time of C-pin shall be changed by time constant of added CR, so that please use this device after confirmation.

3.3 When steep voltage noise is applied between the primary side and the secondary side of the photocoupler, current flows or changes in the light emitting diode through a parasitic capacitance between the primary side and the secondary side of the photocoupler, then there is a case that miss operation occurs depending upon the applied noise level. We should certainly recommend to use a by-pass capacitor between both terminals of the light emitting diode when used in a noisy environment.

3.4 The detector which is used in this device, has parasitic diode between each pins and GND.
There are cases that miss operation or destruction may be occurred if electric potential of any pin becomes below GND level even for instant.
Therefore it shall be recommended to design the circuit that electric potential of any pin does not become below GND level.

3.5 The LED used in the Photocoupler generally decreases the light emission power by operation. In case of long operation time, please design the circuit with considering the decreases of the light emission power of the LED. (50%/5years)
Please decide the input current which become 2 times of MAX. I_{FLH}.

REFERENCE PC929J00000F

4. Precautions for Soldering

(1) In the case of flow soldering (Whole dipping is possible.)

It is recommended that flow soldering should be at 270℃ or less for 10 s or less (Pre-heating : 100 to 150℃, 30 to 80s). (2 times or less)

(2) If solder reflow :

It is recommended to be done at the temperature and the time within the temperature profile as shown in the figure below. (2 times or less)

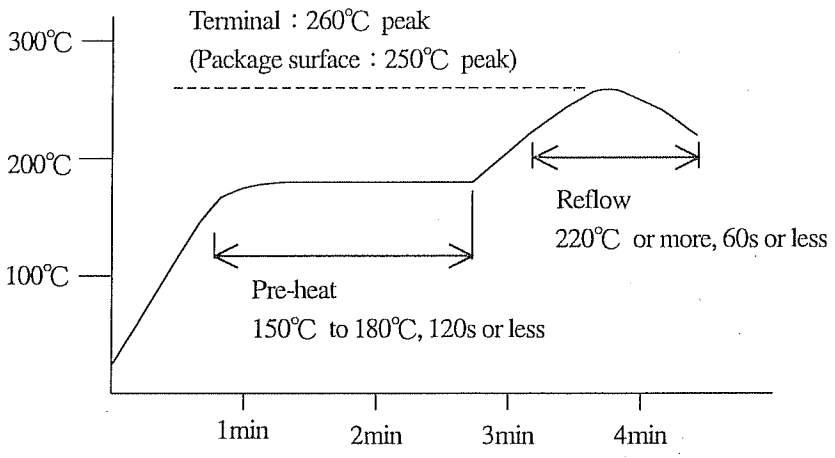

(3) In the case of hand soldering

What is done on the following condition is recommended.(2 times or less)

Soldering iron temperature : 400℃ or less

Time : 3s or less

(4) Other precautions

Depending on equipment and soldering conditions (temperature, Using solder etc.), the effect to the device PCB is different.

Please confirm that there is no problem on the actual use conditions in advance.

REFERENCE

1. This specification shall be applied to photocoupler, Model No. PC929 as an option.

2. Applicable Models (Business dealing name)
   PC929YJ0000F

3. The relevant models are the models Approved by VDE according to DIN EN 60747-5-2.
   Up to date code "RD" (December 2003), the relevant models are approved by VDE according to DIN VDE 0884/08.87.
   Approved Model No. : PC929
   VDE approved No. : 94626 (According to the specification DIN EN 60747-5-2)
   - Operating isolation voltage U_{IORM} : 890V $_{(Peak)}$
   - Transient voltage : 7100V
   - Pollution : 2
   - Clearances distance (Between input and output) : 6.4mm (MIN.)
   - Creep age distance (Between input and output) : 6.4mm (MIN.)
   - Isolation thickness between input and output : 0.15mm (MIN.)
   - Tracking-proof : CTI 175
   - Safety limit values Current (Isi) : 120mA (Diode side)
     Power (Psi) : 687mW (Detector side)
     Temperature (Tsi) : 150℃

   In order to keep safety electric isolation of photocoupler, please set the protective circuit to keep within safety limit values when the actual application equipment troubled.
   - Indication of VDE approval " VDE " is printed on minimum unit package.

4. Outline Refer to the attachment-2-2.

5. Isolation specification according to EN 60747-5-2

Parameter	Symbol	Condition	Rating	Unit	Remark
Class of environmental test	-	-	25/80/21	-	
Pollution	-	-	2	-	
Maximum operating isolation voltage	$U_{IORM(PEAK)}$	-	890	V	Refer to the Diagram 1,2 (Attachement-2-3)
Partial discharge test voltage (Between input and output)					
Diagram 1	$Upr_{(PEAK)}$	tp=10s,qc<5pC	1340	V	
Diagram 2		tp=1s,qc<5pC	1670	V	
Maximum over-voltage	$U_{IOTM\ (PEAK)}$	t_{INI}=60s	7100	V	
Safety maximum ratings					Refer to Fig. 6,7 (Attachement-2-3)
1) Case temperature	Tsi	I_F=0,P_C=0,	150	℃	
2) Input current	Isi	Pc=0	120	mA	
3) Electric power (Output or Total power dissipation)	Psi	-	687	mW	
Isolation resistance (Test voltage between input and output ; DC500V)	R_{ISO}	Ta=Tsi	MIN.10^9	Ω	
		Ta=Topr(MAX.)	MIN.10^{11}		
		Ta=25℃	MIN.10^{12}		

6. Precautions in performing isolation test
   6.1 Partial discharge test methods shall be the ones according to the specifications of EN 60747-5-2
   6.2 Please don't carry out isolation test (V_{iso}) over U_{IOTM}. This product deteriorates isolation characteristics by partial discharge due to applying high voltage (ex. U_{IOTM}). And there is possibility that this product occurs partial discharge in operating isolation voltage. (U_{IORM}).

4. Outline

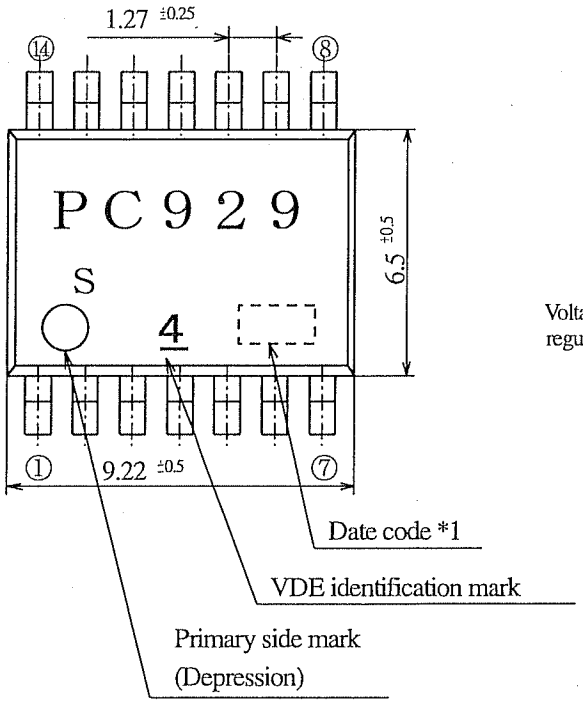

Pin-Number and internal connection diagram

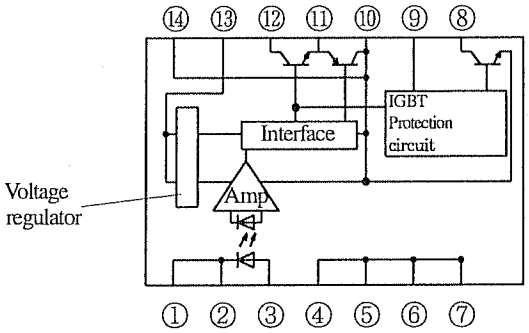

① Cathode		⑧ FS	
② Cathode		⑨ C	
③ Anode		⑩ GND	
④ N.C.	*2	⑪ O_2	
⑤ N.C.		⑫ O_1	
⑥ N.C.		⑬ V_{CC}	
⑦ N.C.		⑭ GND	

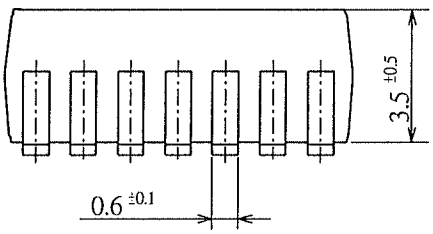

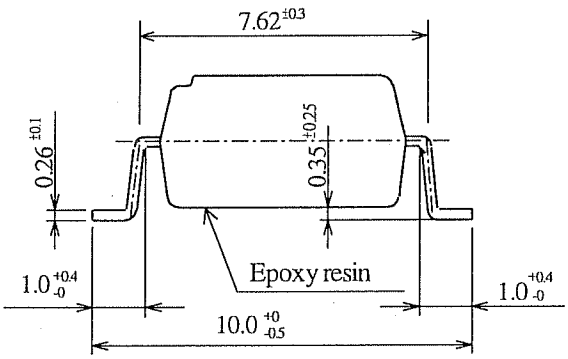

*1) 2-digit number marked according to OLD DIN standard.
*2) No.④~⑦ pins shall be shorted in the device.

Pin material : Copper Alloy
Pin finish : SnCu plating (Cu : TYP. 2%)

Product mass : Approx. 0.47g

UNIT : 1/1 mm	
Name	PC929 Outline Dimensions (Business dealing name : PC929YJ0000F)

REFERENCE

Method of Diagram 1: Breakdown test (Apply to tape test and sampling test)

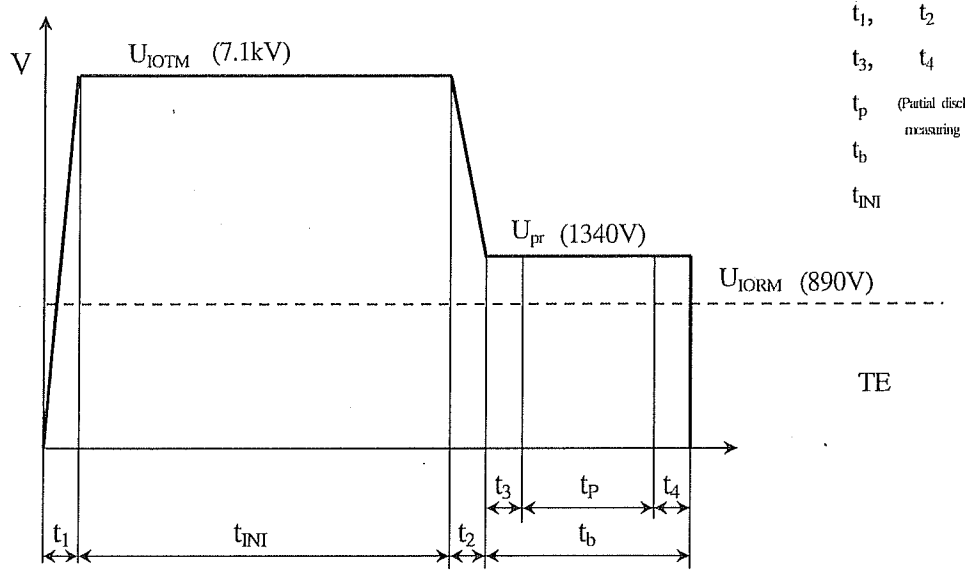

t_1, t_2		= 1 to 10 s
t_3, t_4		= 1 s
t_p	(Partial discharge measuring time)	= 10 s
t_b		= 12 s
t_{INI}		= 60 s
TE		<5pC

Method of Diagram 2: Non breakdown test (Apply to all device test)

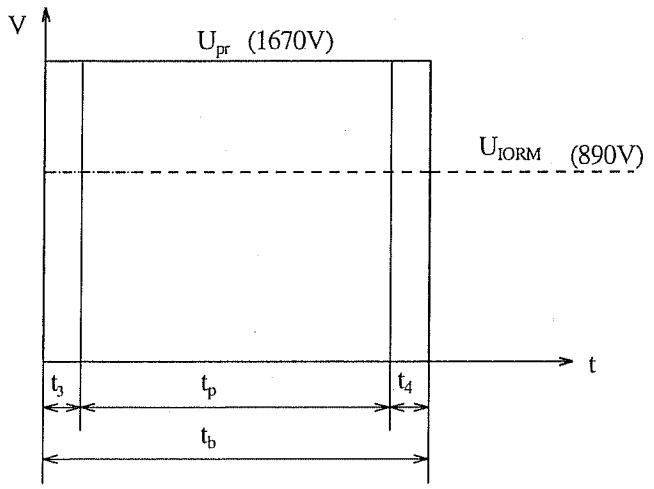

t_3, t_4		= 0.1 s
t_p	(Partial discharge measuring time)	= 1 s
t_b		= 1.2 s
TE		<5pC

(Fig.4) Safety maximum power dissipation vs. ambient temperature (When failed)

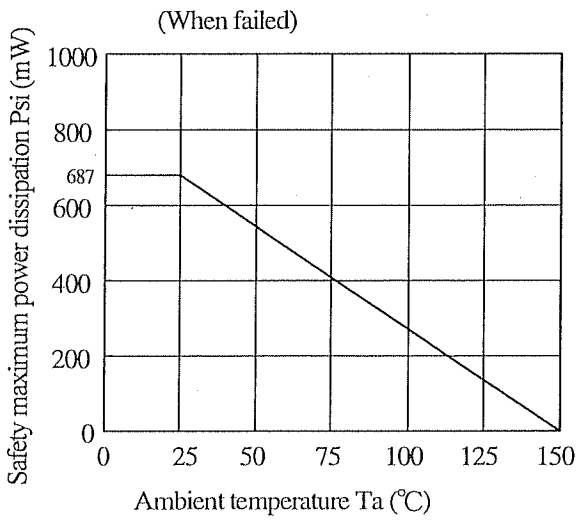

(Fig.5) Safety maximum forward current vs. ambient temperature (When failed)